Dial/Test Indicator & Magnetic Stand Sets

SERIES 7

513-907

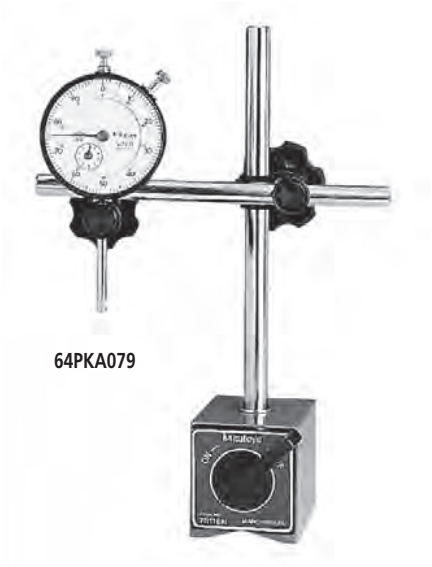

64PKA079

SPECIFICATIONS

Set No.	Included in set
64PKA078	2804S-10, 7010S
64PKA079	2416S, 7010S
513-907	513-402, 7014E
513-908	513-404E, 7014

*Supplied with collar **02AZC291**

Magnetic Stands

SERIES 7

Mitutoyo's Magnetic Stands accept all dial indicators and dial test indicators. The ON-OFF switch offers instant mounting and dismounting without any adverse effect to the indicators or workpiece surface.

7010S

7011BN

7033B

7014 / 7014E
No magnet force ON/OFF

7012-10

SPECIFICATIONS

Order No.	Description	Applicable holding stem dia.	Dovetail groove	Remarks
7010S	Magnetic stand	ø6mm, ø8mm*, ø9.53mm (3/8")	—	—
7011BN	Magnetic stand	ø6mm, ø8mm*, ø9.53mm (3/8")	—	With fine adjustment
7012-10	Magnetic flexi-stand	ø6mm, ø8mm*, ø9.53mm (3/8")	—	For dial test indicator
7014	Mini magnetic stand	ø6mm, ø8mm	Provided	Without magnet ON/OFF
7014E	Mini magnetic stand	ø6mm, ø8mm*, ø9.53mm (3/8")	Provided	Without magnet ON/OFF
7033B	Universal magnetic stand	ø6mm, ø8mm, ø9.53mm (3/8")	Provided	With mechanical locking sytem

*Supplied with collar **02AZC291**

DIMENSIONS

Unit: mm

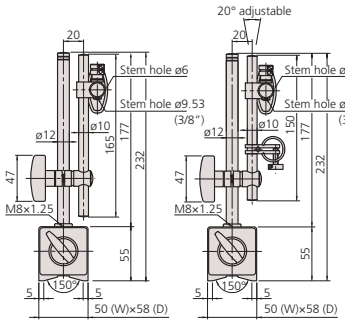

7010S 7011BN

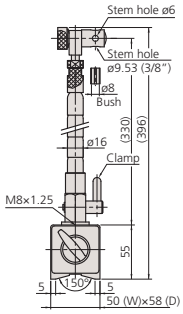

7012-10

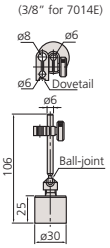

7014 / 7014E

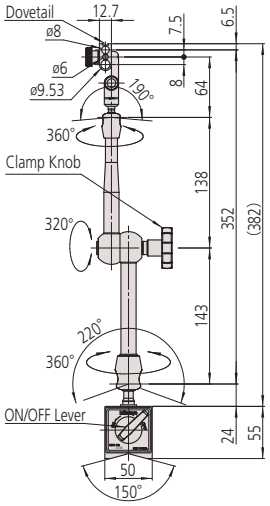

7033B